WESTERN PRODUCTS
7777 NORTH 73RD STREET
P.O. BOX 23045
MILWAUKEE, WISCONSIN 53223

A DIVISION OF DOUGLAS DYNAMICS, INC.

TRI-PLOW

Blade, A-Frame, and Lift Channel

INSTALLATION ILLUSTRATION & INSTRUCTIONS

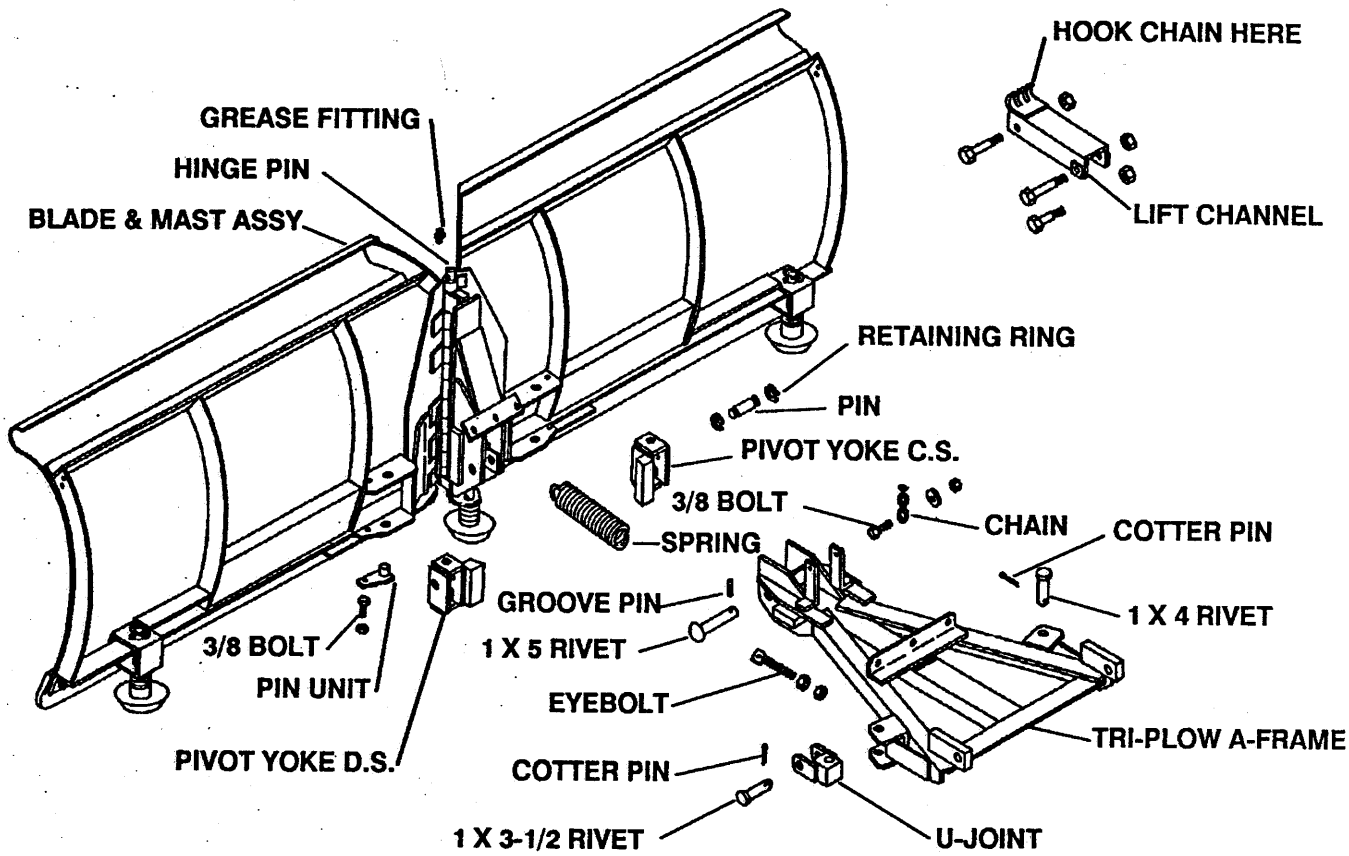

BLADE ASSEMBLY AND A-FRAME

Remove top pipe plug from Hinge Pin and install Grease Fitting. Attach A-Frame to Mast with 1" x 5" Rivet secured with 3/16" x 1-3/4" Groove Pin.

SPRINGS AND EYEBOLTS

Install one nut all the way down on each Eyebolt. Hook springs to eyebolts and mast bar. Insert eyebolts through holes in A-Frame angle and tighten by installing a second nut behind the angle. Tighten only until the coils begin to separate (springs should have a ringing rather than a dead sound when hit) and lock in place with the first nuts.

CYLINDER ATTACHMENT

Assemble driver and curb side Pivot Yokes, with cross holes towards top of blade, to blade halves using a Pin Unit in top and bottom holes. Secure pin units with 3/8" x 1-1/2" bolts and locknuts. Install Retaining Ring to Pin. Place plunger end of cylinder into Pivot Yoke, insert Pin through yoke and plunger and secure Pin with second Retaining Ring. Attach base end of cylinder, ports facing up, to U-Joint with 1" x 3-1/2" Rivet and Cotter Pin. Place U-Joint into bracket on each side of A-Frame and secure with 1" x 4" Rivet and Cotter Pin.

A-FRAME TO MOUNT

Couple A-Frame to Mount spreader frame lugs using 1" x 3-1/2" Hitch Pins and Hairpin Cotter Pins.

CHAIN TO A-FRAME AND LIFT CHANNEL

Attach chain end loops to outside of upright bars near front of A-Frame. Secure with 3/8" x 1-1/2" bolts from inside bars, flatwashers to chain loops and locknuts. With lift ram collapsed, pull chains tight and hook into Lift Channel. This will allow proper slack in chain for blade "float".

Lubricate Hinge Pin with general purpose chassis lube. Raise, lower and angle plow several times, check oil level with all rams retracted and refill to top with automatic transmission fluid.

Form No. 13502-8904

Printed in U.S.A.